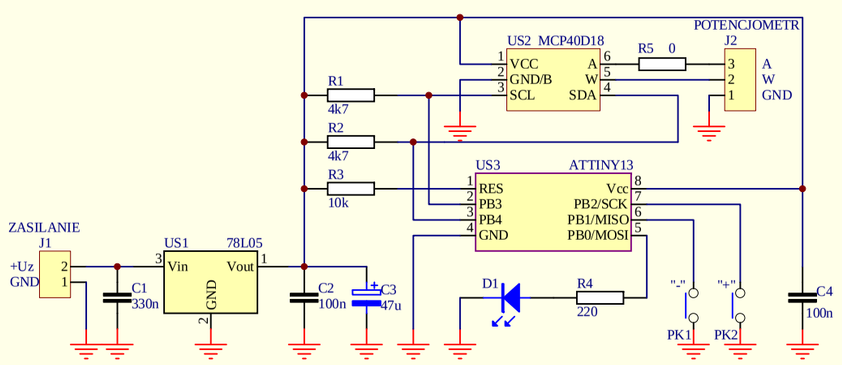

Title		
Size B	Number	Revision
Date: 4-Jul-2016		Sheet of
File: H:CyfrZamPot_R03.ddb		Drawn By: